EXPLORER PLUS™

Semi-Micro Balances



Engineered for Accuracy, Designed for Demanding Applications

The new Explorer Plus (EXP Series) offers a premium weighing performance, compliance support and data traceability. The advanced features take the EXP to the next level by optimizing the user experience. This flagship balance is crafted to meet the most demanding requirements of modern scientific research.

Unique Features:

- **Intelligent User Experience**

  Seamless setup with motorized leveling, anti-pinch auto-doors, touchless sensors, ionizer and draftshield light. A 7-inch glass touchscreen, chemical protection and 2 customizable status lights.

- **Supports Compliance for Data Traceability**

  Ensure compliance with 4-level user system, password protection, and 100k internal system log. The time synchronization NTP function confirms data traceability to meet pharmaceutical regulations.

- **Effortless System Integration**

  Advanced communication capabilities with straightforward integration to Laboratory Information Management Systems (LIMS), and hassle-free data transfer with driverless HID for easy data input.

EXPLORER PLUS™ *Semi-Micro Balances*

Specifications



Model	EXP125D/AD	EXP125/AD	EXP225D/AD	EXP225/AD
Capacity	82 g / 120 g	120 g	120 g / 220 g	220 g
Readability d, Fine Range	0.01 mg	0.01 mg	0.01 mg	0.01 mg
Readability d, Full Range	0.1 mg	0.01 mg	0.1 mg	0.01 mg
Repeatability (sd.), ≤5% of Full Load Typical	0.01 mg	0.01 mg	0.01 mg	0.01 mg
Repeatability (sd.), 5% of Full Load to Fine Range Max	0.02 mg	0.02 mg	0.02 mg	0.02 mg
Repeatability (sd.), Fine Range Max to Full Range	0.1 mg	0.02 mg	0.1 mg	0.02 mg
Linearity Deviation Typical	0.06 mg	0.06 mg	0.06 mg	0.06 mg
Linearity Deviation	0.2 mg	0.1 mg	0.2 mg	0.1 mg
Span Calibration Points	25g, 50g, 75g, 100g		50g, 100g, 150g, 200g	
Weighing Units	g, mg, ct, N, oz, ozt, Grain, dwt, mo, msg, tcl, tola, baht, Custom 1, Custom 2			
Applications	Basic Weighing, Parts Counting, Check Counting, Percent Weighing, Check Weighing, Dynamic Weighing, Totalization, Formulation, Differential, Density Determination, Peak Hold, Pipette Adjustment, SQC, Fill Weight Variation, Flow Rate Control			
Stabilization Time (typical)	0.1 mg: ≤2 seconds, 0.01 mg: ≤ 5 seconds			
Sensitivity Temperature Drift (ppm/°C)	0.8			
Min-Weight (Typical) (K=2, U=1%)	2 mg			
Min-Weight (typical) (USP, K=2, U=0.10%)	20 mg			
Min-Weight (optimal) (USP, K=2, U=0.10%, SRP≤0.41d)	8.2 mg			
Terminal Display	7-inch TFT 16.7M Color Touch Screen with Glass Overlay, Detachable Terminal			
Display Resolution	800 x 480 Pixels			
Communication	USB Host (Type A) x 2, USB Device (Type B) x 1, USB Device (Type C) x 1 Ethernet (RJ45) x 1, RS232 x 1; Optional Wi-Fi, Bluetooth Dongle			
Leveling System	Motorized Leveling System with Digital Leveling Bubble			
Power Supply	AC Adapter Input: 100-240 VAC 0.5A 50-60 Hz AC Adapter Output: 12 VDC 1.5A			
Weighing Pan Size	Aero Pan 80mm x 80mm			
Built-in Ionizer	Standard			
Environmental Sensor (Load Cell)	Temperature Sensor, Relative Humidity Sensor (RH), Air Pressure Sensor			
Touchless Sensor	2 Touchless Sensors on the terminal			
Draftshield with anti-static coating	Standard			
Automatic Draftshield Door Function	Standard, Open Range: 1/2 open and fully open			
Draftshield & Terminal Status Lights	Standard, 7-color Selectable			
Sample Spotlight	Standard, White			
Terminal Housing Dimensions (W x D x H)	205mm x 126mm x 66mm			
Base Housing Dimensions (W x D x H)	229mm x 275mm x 78mm			
Assembled Dimensions (W x D x H)	229mm x 408mm x 372mm			
Shipping Dimensions (W x D x H)	415mm x 630mm x 561mm			
Net Weight	7.8 kg			
Shipping Weight	12.0 kg			

Outline Dimensions

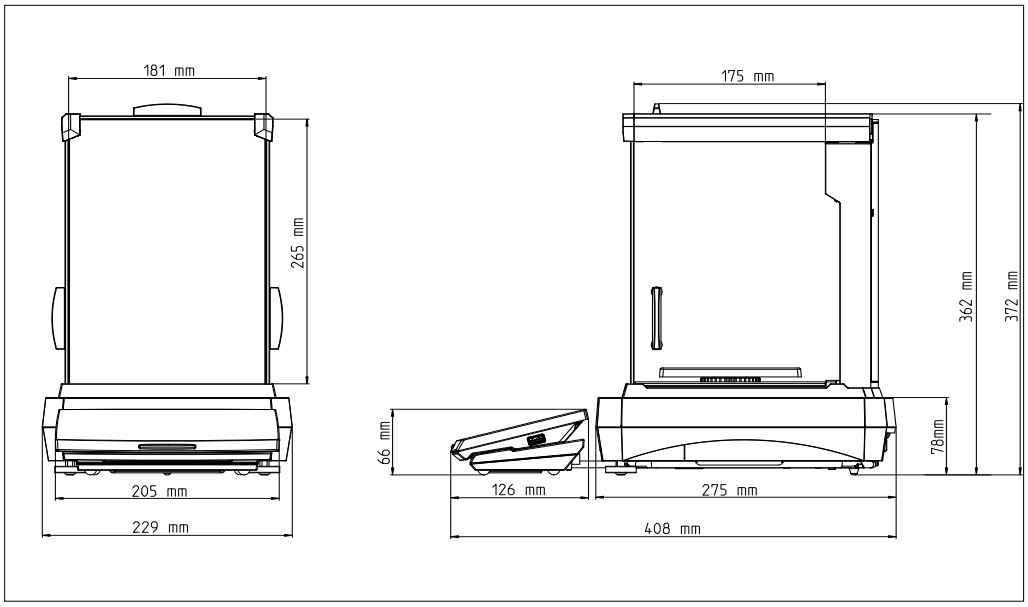

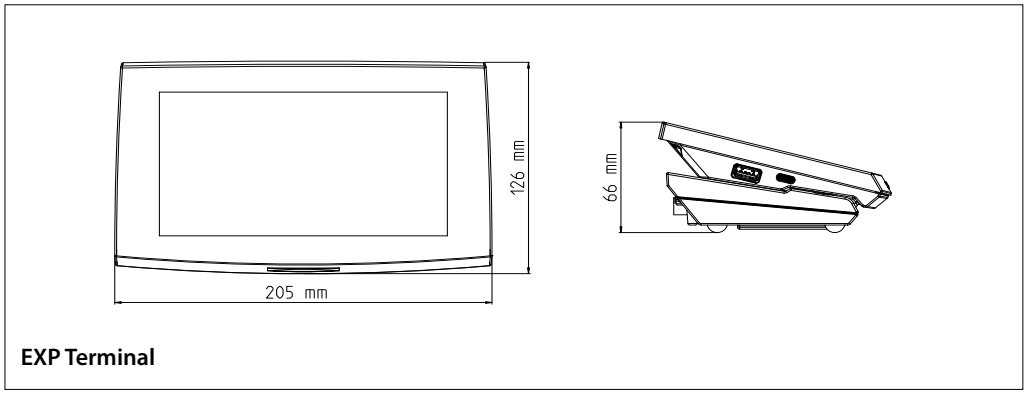

EXP Terminal

Compliance

- **Metrology:** OIML R76
- **Product Safety:** IEC/EN 61010-1; CAN/CSA C22.2 61010-1; UL 61010-1
- **Electromagnetic Compatibility:** IEC/EN 61326-1 Class B, Basic Environments; FCC Part 15 Class A; Canada ICES-003 Class A

Accessories

	Item No.	30944358
	Accessory Name	Bluetooth Printer, Impact, SF40A/BT
	Item No.	30045641
	Accessory Name	Printer, Impact, SF40A
	Item No.	31059238
	Accessory Name	Fingerprint scanner FIN-100A
	Item No.	31059239
	Accessory Name	BT dongle and Wi-Fi dongle LM842
	Item No.	30130303
	Accessory Name	Static Ionizer, ION-100A
	Item No.	30093334
	Accessory Name	Dust Cover, Balance with Draft Shield
	Item No.	80253384
	Accessory Name	Density Kit, Solids
	Item No.	83034024
	Accessory Name	Sinker, Glass, Liquid, Density Kit
	Item No.	31180586
	Accessory Name	Pipette Adjustment Kit EXP Semi-Micro
	Item No.	30078078
	Accessory Name	Terminal Extension Cable, RS422, 9 m
	Item No.	12120799
	Accessory Name	SF40A Paper roll (57,5mm 2pcs)
	Item No.	30529322
	Accessory Name	SF40A Ink Ribbon Cassette

EXPLORER PLUS™ *Semi-Micro Balances*

	**Item No.**	31059237
	Accessory Name	Weighing Kit

	**Item No.**	31141735
	Accessory Name	Holder for Filter Paper

	**Item No.**	31141736
	Accessory Name	Holder for Tube

	**Item No.**	31141737
	Accessory Name	Holder for Syringe

	**Item No.**	31141788
	Accessory Name	Holder for Round Bottom Flask (max 250ml)

	**Item No.**	31129894
	Accessory Name	In-Use Cover Terminal, EXP

	Item No.	31129895
	Accessory Name	In-Use Cover DS, EXP

80777043_D 20260911 © Copyright OHAUS Corporation

OHAUS Asia/Pacific Headquarters

e-mail: APmarketing@ohaus.com
Tel: +86 21 64855408

With offices throughout Europe, Asia, and Latin America

ISO 9001:2015

Registered Quality Management System

OHAUS®